PRODUCT INFORMATION

MCS300P
Multi Component Analyzer System

Process monitoring in gases or liquids

SICK
Sensor Intelligence.

Sophisticated analyzers for high-value products. Reliable measuring results through photometric process monitoring.

Product quality in chemical processes also depends not least on the quality of the process measurement technology. High-value products demand sophisticated measurement technology. SICK has been delivering suitable measuring systems as well as turnkey complete solutions for many years.

Versatile use

MCS300P process measuring devices are generally suitable for use in all process industries. From synthetics production on through exhaust gas cleaning plants up to measuring a wide range of gas components from acetaldehyde to vinyl chloride. And, as well, liquids from acetone to traces of water.

Compact and robust

Compact layout simplifies installing the MCS300P and keeps the maintenance effort very low. The robust analyzer guarantees reliable measuring results even in rough operating conditions.

6 components – also for cross-sensivity compensation

Thanks to two filter wheels, simultaneous recording of up to 6 components is possible. Six cross-sensitivity variables can be corrected dynamically per component to attain the most exact values.

Reading in external signals

Values such as pressure or flow rate can also be read in via analog inputs and included in calculations.

Saving potential through automatic adjustment

An optional adjustment filter wheel is a further MCS300P highlight. Comparable analyzers require expensive test gases for adjustment and checking automatic drift behavior. This involves a high work and safety effort especially in potentially explosive atmospheres. This effort is not required thanks to the adjusting filter wheel which saves time and money.

Process cells for many applications

Various cells can be adapted due to the modular concept of the MCS300P: Long path cells for especially small measuring ranges, cells for liquids or cells for high media pressures. The cells can also be used for measuring toxic and corrosive gases.

Remote diagnosis and remote maintenance

Current communication protocols such as Modbus, TCP/IP and OPC support, via Ethernet connections, easy access to the MCS300P and complete control over measured value recording.

Non-dispersive photometer principle

SICK's MCS300P runs as a non-dispersive process photometer. The beam source sends light through the sample cell. Interference and gas filters swiveled into the beam path on filter wheels then select the desired measuring and reference wavelengths. The precise detector receives the measured and reference beams in chronological sequence. The MCS300P computates both signals to determine the measured variable absorbance that is largely independent of changes in the optical characteristics of the photometer.

This means high long-term stability and reproducibility of measured values. After correction of possible interference factors, the linearization function converts the determined absorbance to a concentration value.

8013235/2012-05

Subject to change without notice

MCS300P Ex: Exact measurement also in Ex conditions

Reliable measuring results
Also in Ex zones
Also for combustible gases

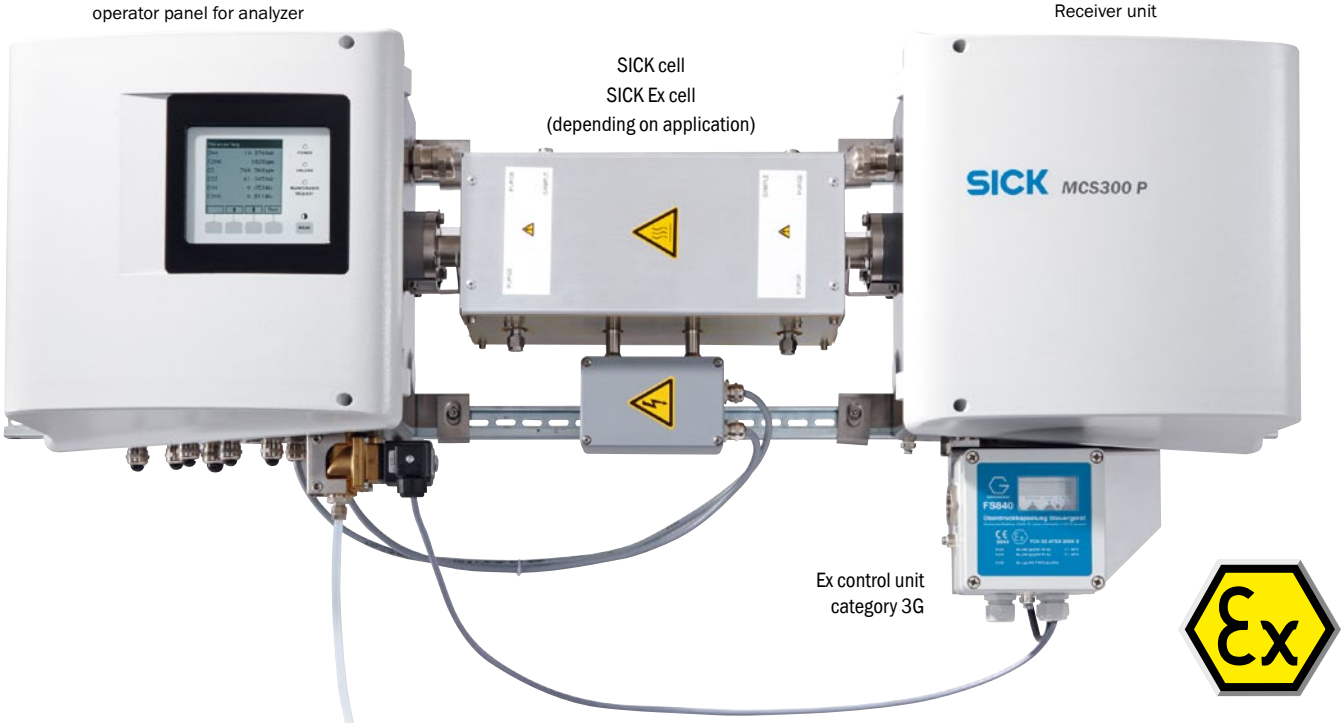

Comprehensive safety functions for Ex areas
The MCS300P Ex with device category 3G or 2G (ATEX) is usable in Ex zones and 1. The pressurized enclosure does not allow any explosive gases to penetrate; the required permanent overpressure in the enclosure is ensured by protective gas purging with appropriate control systems.

For version “3G”, a continuous throughflow with a low protective gas flow rate via digital valve ensures pressurized enclosure “pz”. For version “2G”, pressurized enclosure “px” is realized via proportional valve with leakage compensation. This means high operational reliability with negligible protective gas consumption.

Ex cell for rough industrial use
The associated cells are designed optimally for rough industrial use with sample gas temperatures up to 140 °C and pressures up to 20 bar: Welded-on connecting flanges, integrated safety purge sections, twin Elastomer seals and leak tightness check using the helium leak test. The cells with electrical heating with ignition protection type “Increased safety” are suitable for safe use in Ex zone 1 and also for measuring combustible and ignitable sample gases classified according to ATEX zone 1.

Simultaneous process monitoring of up to 6 measuring components

Product description

The MCS300P is an extractive process photometer for measurement of gaseous or liquid media. It measures IR and VIS active components with variable measuring ranges from very low (ppm) to high (vol%) concentrations. For monitoring of toxic or flammable mixtures, it has special process cuvettes with safety devices like twinseals and flushing gas feeds. The heatable cuvettes made of corrosion-resistant materials have a high pressure resistance. Automatic adjustment, innovative operation concept and modern communication protocols make the MCS300P an all-purpose photometer, also for potentially explosive atmospheres.

At a glance

- Simultaneous measurement of up to 6 components
- Process cuvettes up to 60 bar and 200 °C
- Automatic sample point switching
- Integrated adjustment unit
- Safety devices for measurement of toxic or flammable mixtures
- Extended operation via PC and software SOPAS ET
- Flexible I/O module system

Your benefits

- Automatic adjustment without expensive test gases
- Integration in existing networks
- Integration of external parameters like temperature or pressure
- Suitable for potentially explosive atmospheres

Additional information

Application 5
Detailed technical data 5
Ordering information 7
Dimensional drawings 7

→ **www.mysick.com/en/MCS300P**
For more information, just enter the link and get direct access to technical data, CAD design models, operating instructions, software, application examples and much more.

Application

- Process monitoring in production of vinylchloride or isocyanate
- Process control in chemical industry
- Monitoring of processes in the production of plastics
- Raw gas monitoring in waste incineration
- Monitoring of flue gas purification plants
- Determination of the water content of liquid chemicals

Detailed technical data

System

Measured value	CH_3OH, C_3H_4, Br_2, C_2Cl_4, C_2H_2, $C_2H_2Cl_2$, C_2H_3Cl, C_2H_4, $C_2H_4Cl_2$, C_4H_6, C_2H_6, C_6H_{14}, C_2HCl_3, CH_3Cl, C_3F_6, C_2H_2O, C_3H_6, C_3H_7OH, C_3H_8, C_4H_{10}, C_4H_8, $C_2H_4(OH)_2$, $C_6H_4Cl_2$, HCOOH, C_6H_5Cl, C_6H_6, CCl_2F_2, CCl_4, CH_2Cl_2, CH_3CHO, $CH_3COOC_2H_3$, CH_4, $CHCl_3$, $CHCl_2F$, Cl_2, CO, CO_2, $COCl_2$, C_7H_8, R-NCO, H_2O, HCl, HCN, HF, N_2O, NH_3, NO, NO_2, SO_2, SiF_4, many other IR / VIS active gases and liquids
Maximum number of measurands	6
Measuring principle	
Spectral range	VIS type: 300 nm ... 1,200 nm IR type: 1,200 nm ... 12,000 nm
Measuring ranges	More than 60 measuring components available (depending on concentration and sample gas composition), up to 6 components simultanously, 2 measuring ranges per component, automatic measuring range switching (adjaustable), 2 limit values per component, measuring ranges depend on application and combination of measuring components
Zero point drift	VIS type: < 1 % of smallest measuring range per day IR type: < 2 % of smallest measuring range per week
Detection limit	< 2 % relative to measuring range end value
Ambient temperature	+5 °C ... +40 °C temperature change max. ±10 °C/h
Storage temperature	–20 °C ... +60 °C
Ambient humidity	≤ 80 % non-condensing
Ex-approvals ATEX	II 2G Ex px IIC T4 Gb II 2G Ex px IIC T3 Gb II 3G Ex pz IIC T4 Gc II 3G Ex pz IIC T3 Gc Process cuvette: II 2G Ex e IIC Gb
Electrical safety	CE
Enclosure rating	IP 65 measuring cuvette depending on version
Analogue outputs	2 outputs: 0/4 ... 22 mA, 500 Ω electrically isolated; max. number of outputs depends on application
Analogue inputs	2 inputs: 0/4 ... 22 mA, 100 Ω electrically isolated; max. number of inputs depends on application
Digital outputs	5 outputs: 2 power relays, electrically isolated; 3 outputs, floating; max. number of outputs depends on application
Digital inputs	4 inputs: open contacts, floating; max. number of inputs depends on application
Interfaces	Ethernet (in the Ex-type only when device is open for service purposes)
Bus protocol	Modbus TCP (not in the Ex-version) OPC (not in the Ex-version)
Indication	Status LEDs “Power”, “Maintenance” and “Fault” LC display
Input	Functional keys

Operation	Via LC-display, via software SOPAS ET (not in the Ex-type)
Dimensions (W x H x D)	See dimensional drawings
Weight	≤ approx. 30 kg without measuring cuvette
Material in contact with media	Measuring cuvette depending on version
Material	Aluminium, coated
Supply voltage	Standard type: 115 V / 230 V Ex-type: 230 V Ex control device: 230 V
Supply frequency	Analyzer: 50 ... 60 Hz Ex control device: 48 ... 62 Hz
Power consumption	Analyzer ≤ 230 W With cuvette heating ≤ 805 W With 2nd heating ≤ 1,450 W
Correction functions	Cross-sensitivity compensation of up to 6 interferents
Items supplied	The scope of delivery depends on application and customer specifications.

Ordering information

Our regional sales organization will help you to select the best fitting device configuration.

Dimensional drawings

MCS300P, horizontal

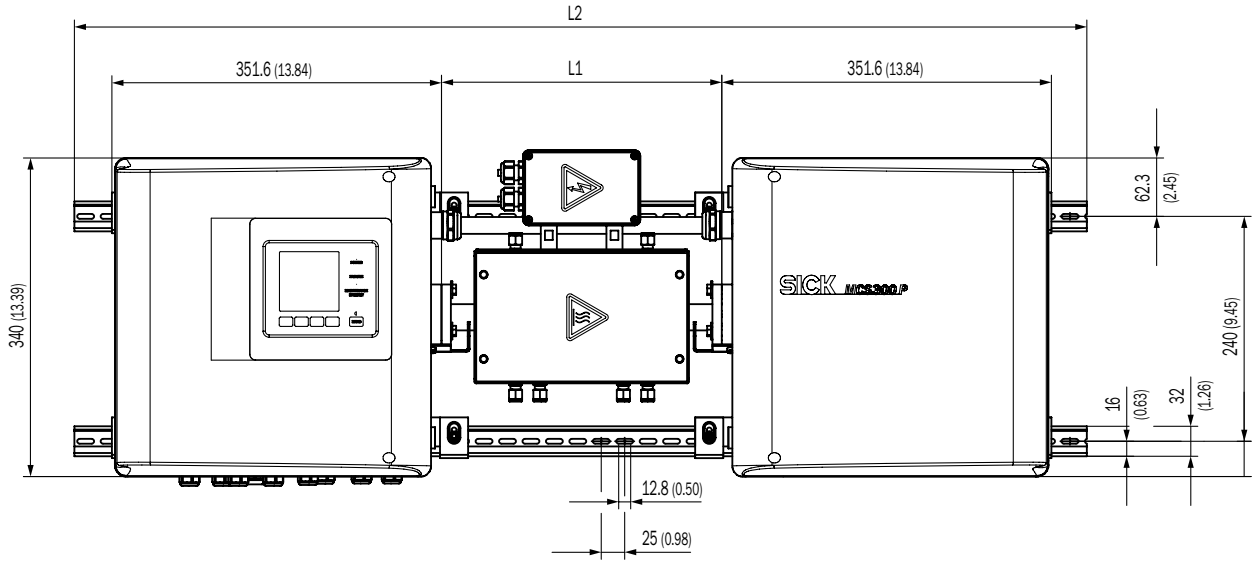

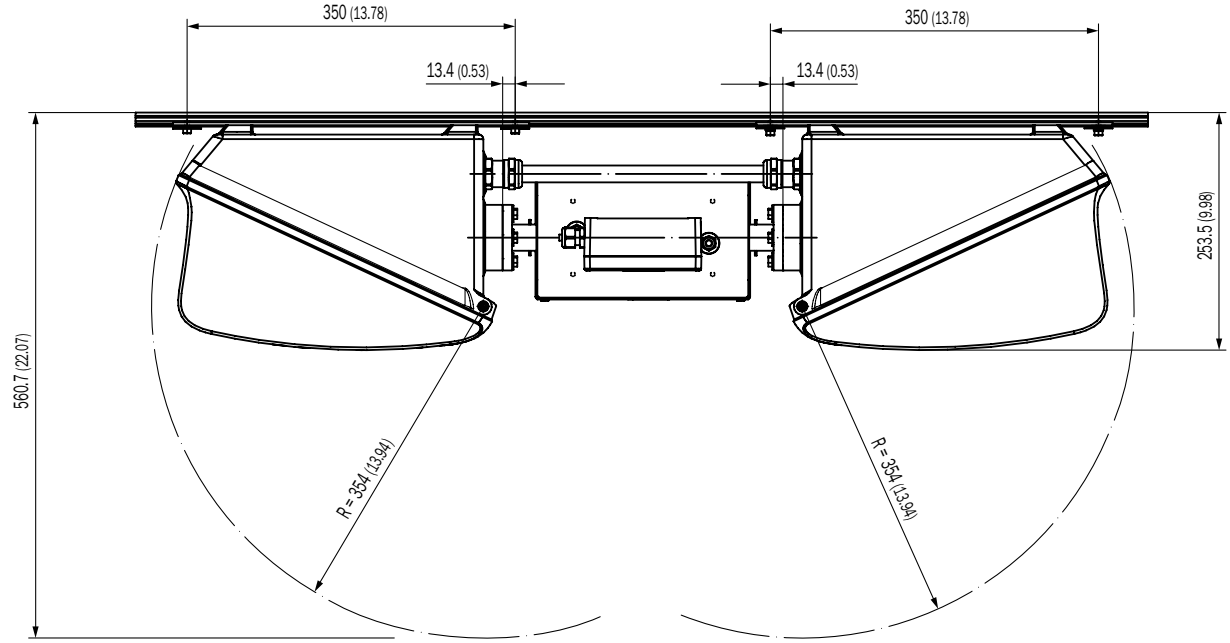

Cuvette	Length		Weight
	L1	L2	total
FGK	168 ... 229 (6.72 ... 9.02)	1000 (39.37)	33.5
PGK10, FGK	299 (11.77)	1080 (42.52)	37
PGK20	399 (15.71)	1180 (46.46)	39
PGK50	699 (27.52)	1480 (58.27)	45
PGK75	949 (37.36)	1730 (68.11)	50
All dimensions in mm (inch); all weights in kg			

MCS300P, vertical

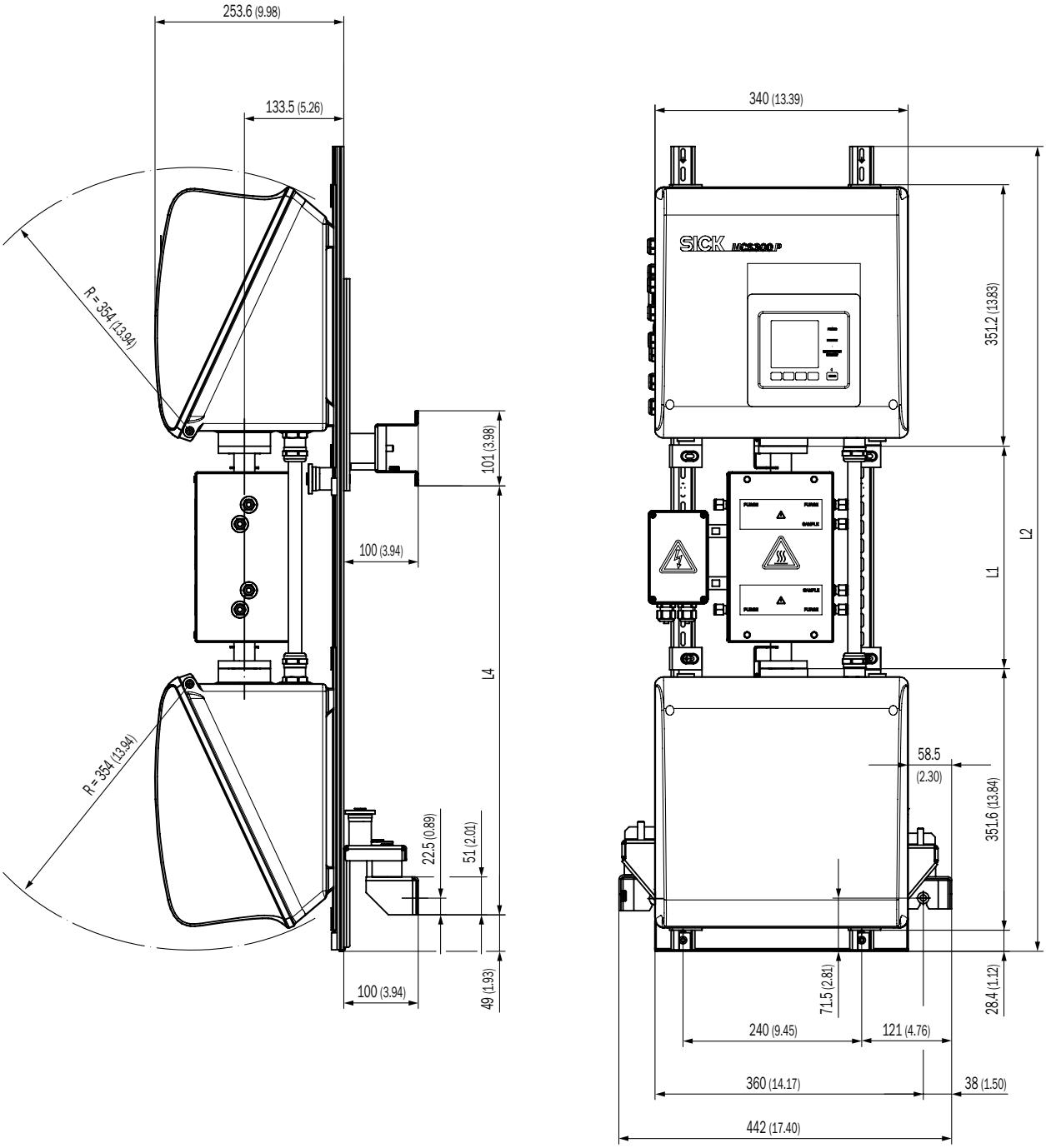

Cuvette	Length			Weight
	L1	L2	L4	total
FGK	224 (8.82)	1000 (39.37)	494 (19.45)	39.5
PGK190, FGK	299 (11.77)	1080 (42.52)	569 (22.40)	43
PGK20	399 (15.71)	1180 (46.46)	669 (26.34)	45
PGK50	699 (27.52)	1480 (58.27)	969 (38.15)	51
PGK75	949 (37.36)	1730 (68.11)	1219 (47.99)	56
All dimensions in mm (inch); all weights in kg				

MCS300P Ex, horizontal

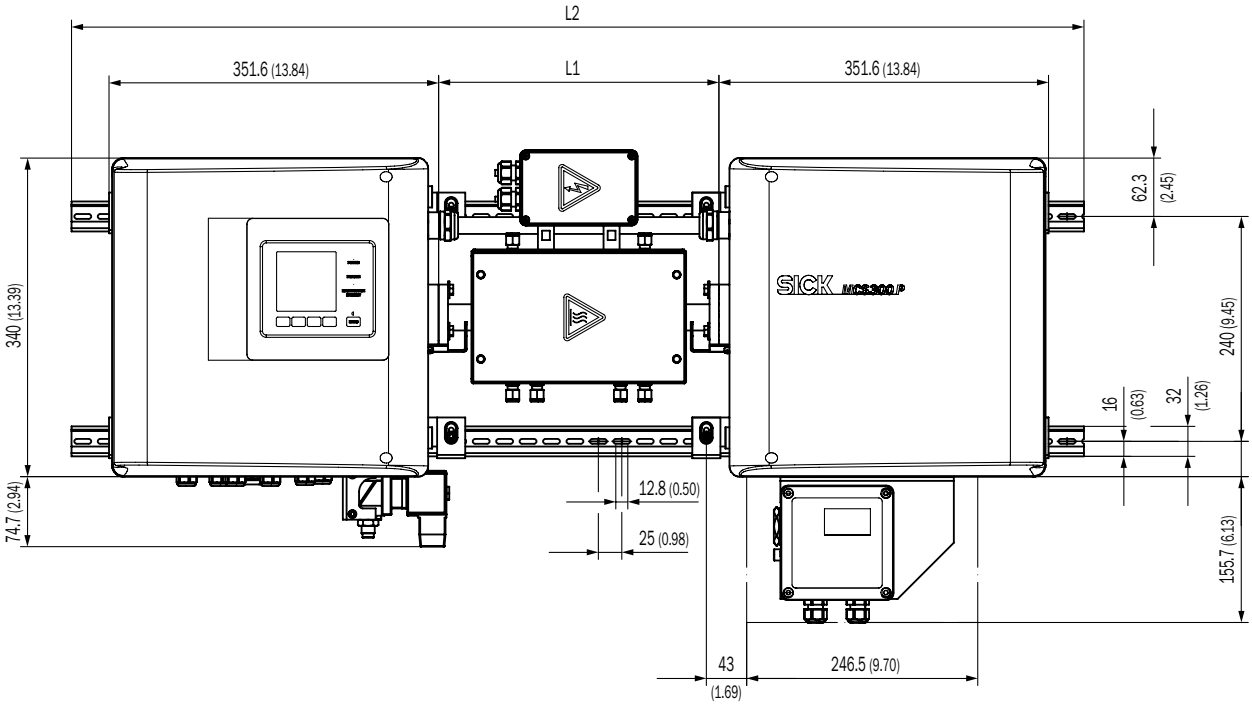

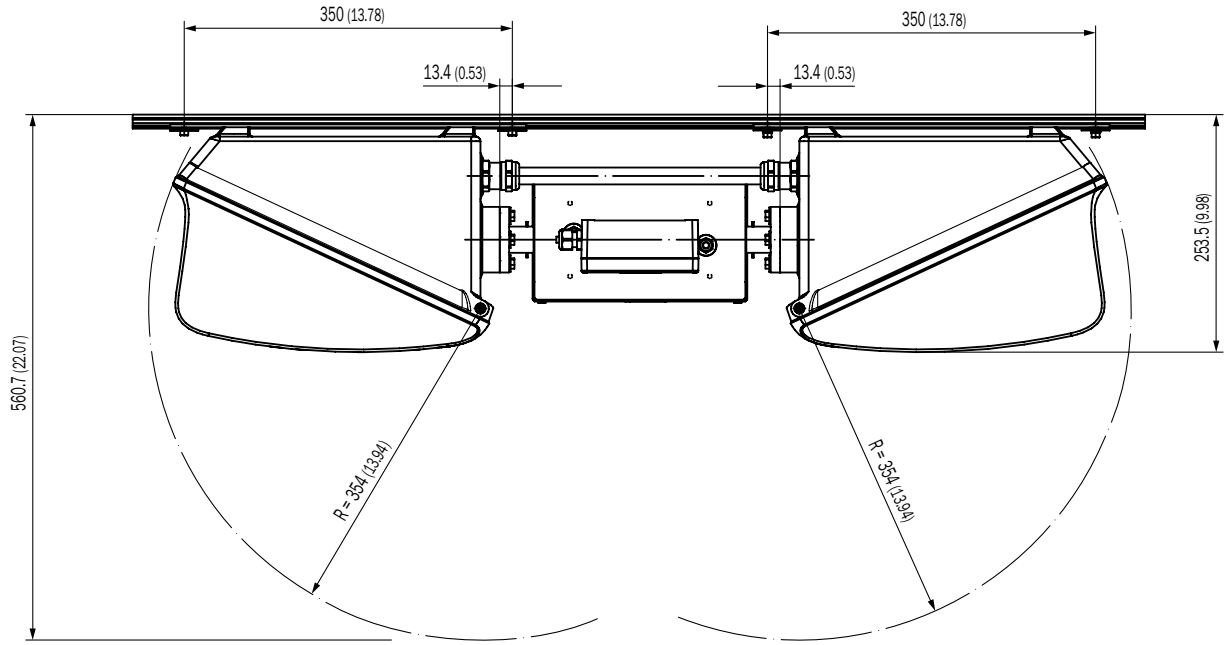

Cuvette	Length		Weight
	L1	L2	total
PGK10 Ex	299 (11.77)	1080 (42.52)	37
PGK20 Ex	399 (15.71)	1180 (46.46)	39
PGK50 Ex	699 (27.52)	1480 (58.27)	45
PGK75 Ex	949 (37.36)	1730 (68.11)	50
All dimensions in mm (inch); all weights in kg			

MCS300P Ex, vertical

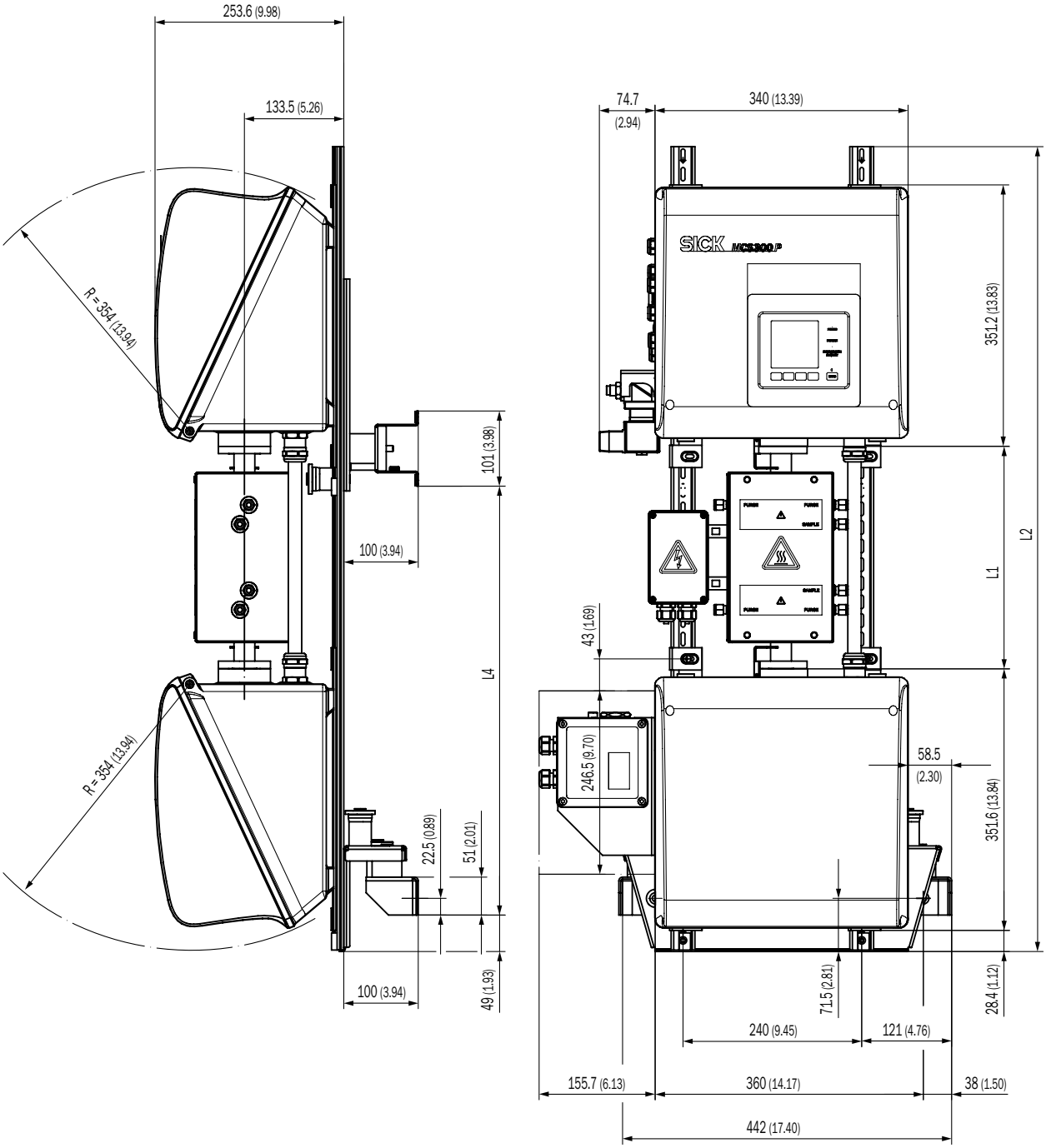

Cuvette	Length			Weight
	L1	L2	L4	total
PGK10 Ex	299 (11.77)	1080 (42.52)	569 (22.40)	43
PGK20 Ex	399 (15.71)	1180 (46.46)	669 (26.34)	45
PGK50 Ex	699 (27.52)	1480 (58.27)	969 (38.15)	51
PGK75 Ex	949 (37.36)	1730 (68.11)	1219 (47.99)	56
All dimensions in mm (inch); all weights in kg				

dimensions in mm

Search online quickly and safely with the SICK „Finders“

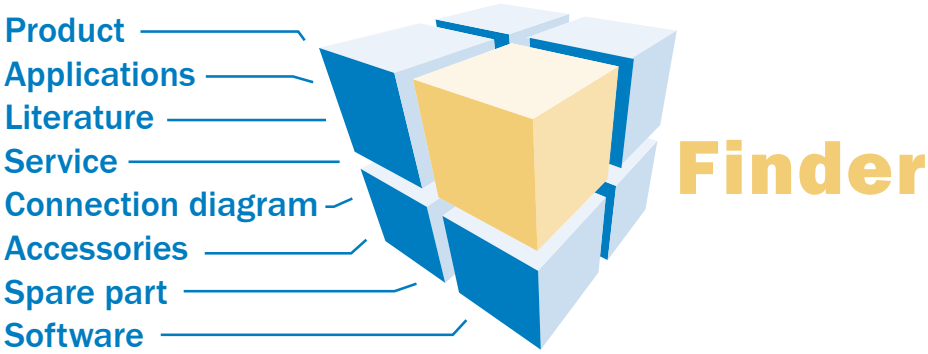

Product Finder: We can help you to quickly target the product that best matches your application.

Applications Finder: Select the application description on the basis of the challenge posed, industrial sector, or product group.

Literature Finder: Go directly to the operating instructions, technical information, and other literature on all aspects of SICK products.

These and other Finders at www.mysick.com

Efficiency – with SICK e-commerce tools

Partner Portal
www.mysick.com

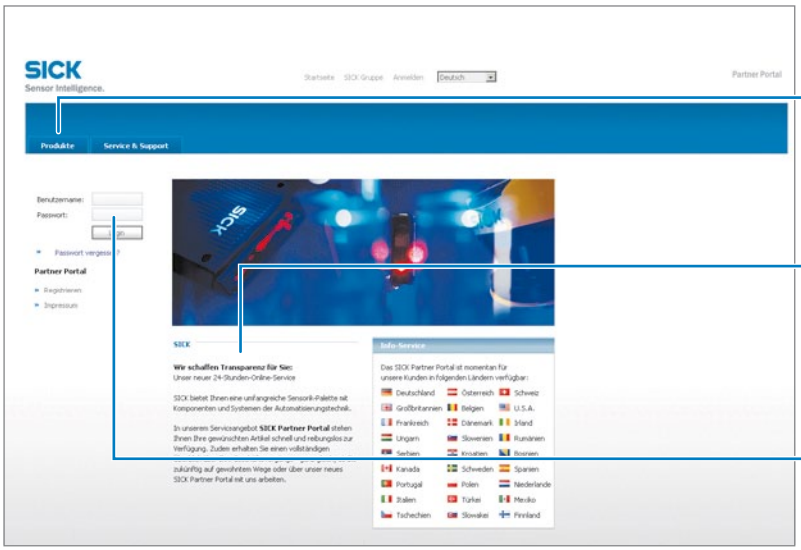

Clearly structured: You can find everything you need for your sensor planning under the menu items Products, Information, and My Account.

Available 24 hours a day: Regardless of where you are in the world or what you would like to know – everything is just a click away at www.mysick.com.

Safe: Your data is password-protected and only visible to you. With the individual user management, you define who can see what data and who can execute what actions.

Find out prices and availability
Determine the price and possible delivery date of your desired product simply and quickly at any time.

Request or view a quote
You can have a quote generated online here.
Every quote is confirmed to you via e-mail.

Order online
You can go through the ordering process in just a few steps.

8013235/2012-05 · DIV03 · WB USmod int38

SICK at a glance

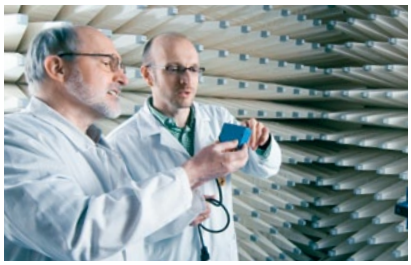

Leading technologies

With a staff of more than 5,000 and over 50 subsidiaries and representations worldwide, SICK is one of the leading and most successful manufacturers of sensor technology. The power of innovation and solution competency have made SICK the global market leader. No matter what the project and industry may be, talking with an expert from SICK will provide you with an ideal basis for your plans – there is no need to settle for anything less than the best.

Unique product range

- Non-contact detecting, counting, classifying, positioning and measuring of any type of object or media
- Accident and operator protection with sensors, safety software and services
- Automatic identification with bar code and RFID readers
- Laser measurement technology for detecting the volume, position and contour of people and objects
- Complete system solutions for analysis and flow measurement of gases and liquids

Comprehensive services

- SICK LifeTime Services – for safety and productivity
- Application centers in Europe, Asia and North America for the development of system solutions under real-world conditions
- E-Business Partner Portal www.mysick.com – price and availability of products, requests for quotation and online orders

Worldwide presence with subsidiaries in the following countries:

Australia
Belgium/Luxembourg
Brasil
Ceská Republika
Canada
China
Danmark
Deutschland
España
France
Great Britain
India
Israel
Italia
Japan
México
Nederland
Norge
Österreich
Polska
România
Russia
Schweiz
Singapore
Slovenija
South Africa
South Korea
Suomi
Sverige
Taiwan
Türkiye
United Arab Emirates
USA

Please find detailed addresses and additional representatives and agencies in all major industrial nations at **www.sick.com**

SICK
Sensor Intelligence.